68040 Proz.sch 2	PCI Slots PCISlot.sch 6	Super I/O super.sch 10	PullUp PullDown PUPD.sch 14
Speicher Memory.sch 3	PCI-ISA Bridge PCI_isa.sch 7	Schnittstellen ports.sch 11	
Glue Logik Glue.sch 4	ISA Slots isaslot.sch 8	Parallele Schnittstelle Para.sch 12	
PCI 9080 PCI.sch 5	IDE Interface IDE_Port.sch 9	ROM, Takt und Reset Takt.sch 13	

Title Milan		
Size A4	Number Titelseite	Revision 1.3
Date: 13-Feb-2001		Sheet 1 of 14
File: S:\PROJEKTE\..\MILAN.PRJ		Drawn By: Uwe Schneider

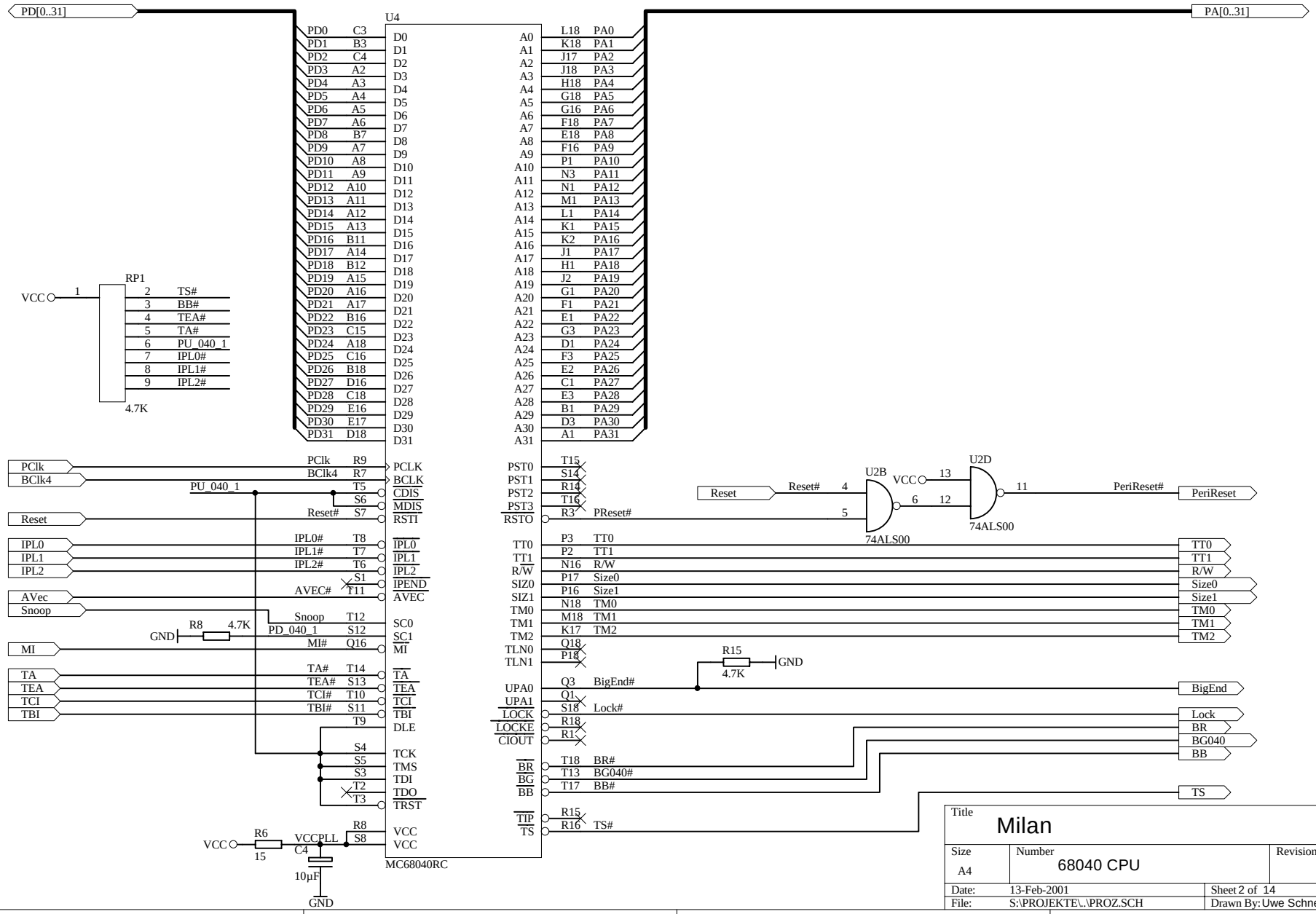
PD[0..31]
PA[0..31]
U4
MC68040RC
RP1
4.7K
VCC
TS#
BB#
TEA#
TA#
PU_040_1
IPL0#
IPL1#
IPL2#
PClk
BClk4
Reset
Reset#
AVec
Snoop
AVEC#
PD_040_1
MI#
MI
TA
TEA
TCI
TBI
TCI#
TBI#
R8
4.7K
GND
R6
15
VCCPLL
C4
10µF
PReset#
PeriReset#
PeriReset
U2B
U2D
74ALS00
R15
BigEnd#
Lock#
BigEnd
Lock
BR
BG040
BB
BR#
BG040#
BB#
TS
TT0
TT1
R/W
Size0
Size1
TM0
TM1
TM2
Title
Milan
Size
A4
Number
68040 CPU
Revision
1.3
Date:
13-Feb-2001
Sheet 2 of 14
File:
S:\PROJEKTE\..\PROZ.SCH
Drawn By: Uwe Schneider

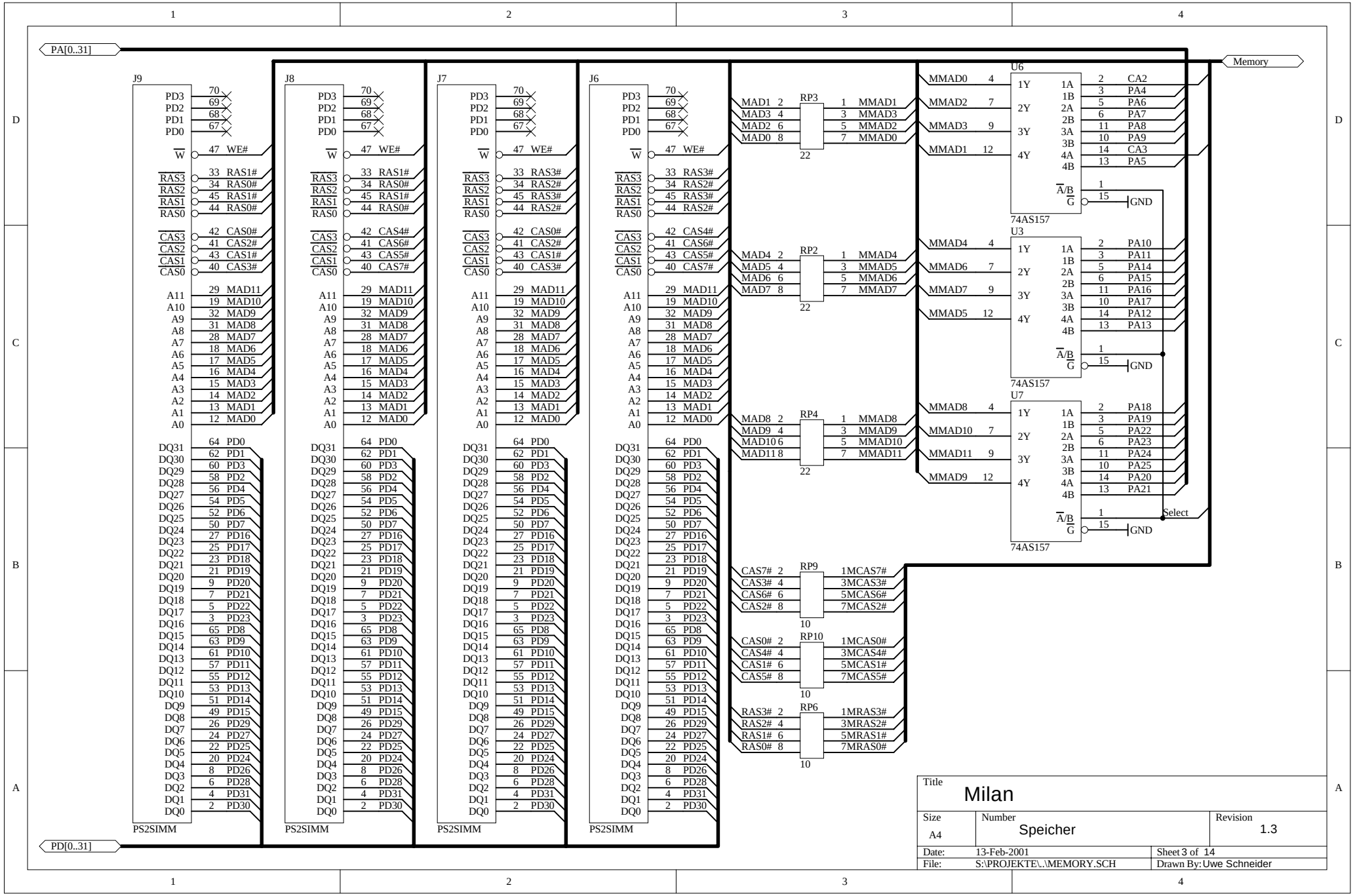
PA[0..31]
PD[0..31]
Memory
J9
J8
J7
J6
PS2SIMM
PD3 PD2 PD1 PD0
W WE#
RAS3 RAS2 RAS1 RAS0
CAS3 CAS2 CAS1 CAS0
A11 A10 A9 A8 A7 A6 A5 A4 A3 A2 A1 A0
DQ31 DQ30 DQ29 DQ28 DQ27 DQ26 DQ25 DQ24 DQ23 DQ22 DQ21 DQ20 DQ19 DQ18 DQ17 DQ16 DQ15 DQ14 DQ13 DQ12 DQ11 DQ10 DQ9 DQ8 DQ7 DQ6 DQ5 DQ4 DQ3 DQ2 DQ1 DQ0
RP3
RP2
RP4
RP9
RP10
RP6
MAD1 MAD3 MAD2 MAD0
MAD4 MAD5 MAD6 MAD7
MAD8 MAD9 MAD10 MAD11
CAS7# CAS3# CAS6# CAS2#
CAS0# CAS4# CAS1# CAS5#
RAS3# RAS2# RAS1# RAS0#
MMAD1 MMAD3 MMAD2 MMAD0
MMAD4 MMAD5 MMAD6 MMAD7
MMAD8 MMAD9 MMAD10 MMAD11
1MCAS7# 3MCAS3# 5MCAS6# 7MCAS2#
1MCAS0# 3MCAS4# 5MCAS1# 7MCAS5#
1MRAS3# 3MRAS2# 5MRAS1# 7MRAS0#
U6
U3
U7
74AS157
MMAD0 MMAD2 MMAD3 MMAD1
MMAD4 MMAD6 MMAD7 MMAD5
MMAD8 MMAD10 MMAD11 MMAD9
CA2 PA4 PA6 PA7 PA8 PA9 CA3 PA5
PA10 PA11 PA14 PA15 PA16 PA17 PA12 PA13
PA18 PA19 PA22 PA23 PA24 PA25 PA20 PA21
A/B G
GND
Select
Title
Milan
Size
A4
Number
Speicher
Revision
1.3
Date: 13-Feb-2001
Sheet 3 of 14
File: S:\PROJEKTE\..\MEMORY.SCH
Drawn By: Uwe Schneider

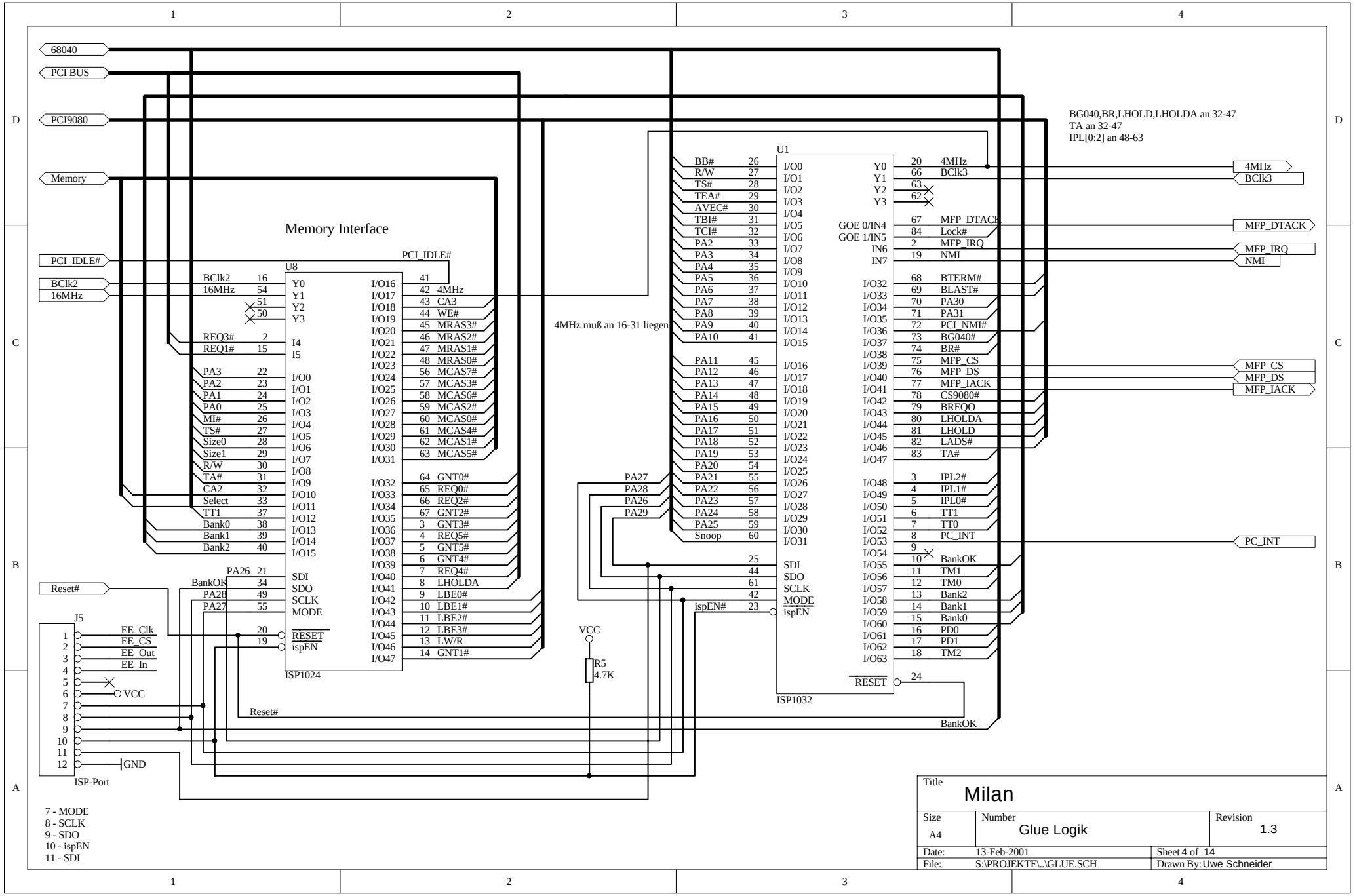
68040
PCI BUS
PCI9080
Memory
PCI_IDLE#
BClk2
16MHz
Reset#
Memory Interface
U8
ISP1024
U1
ISP1032
J5
ISP-Port
EE_Clk
EE_CS
EE_Out
EE_In
VCC
GND
R5
4.7K
4MHz muß an 16-31 liegen
BG040,BR,LHOLD,LHOLDA an 32-47
TA an 32-47
IPL[0:2] an 48-63
4MHz
BClk3
MFP_DTACK
MFP_IRQ
NMI
MFP_CS
MFP_DS
MFP_IACK
PC_INT
7 - MODE
8 - SCLK
9 - SDO
10 - ispEN
11 - SDI
Title
Milan
Size
A4
Number
Glue Logik
Revision
1.3
Date:
13-Feb-2001
Sheet 4 of 14
File:
S:\PROJEKTE\..\GLUE.SCH
Drawn By: Uwe Schneider

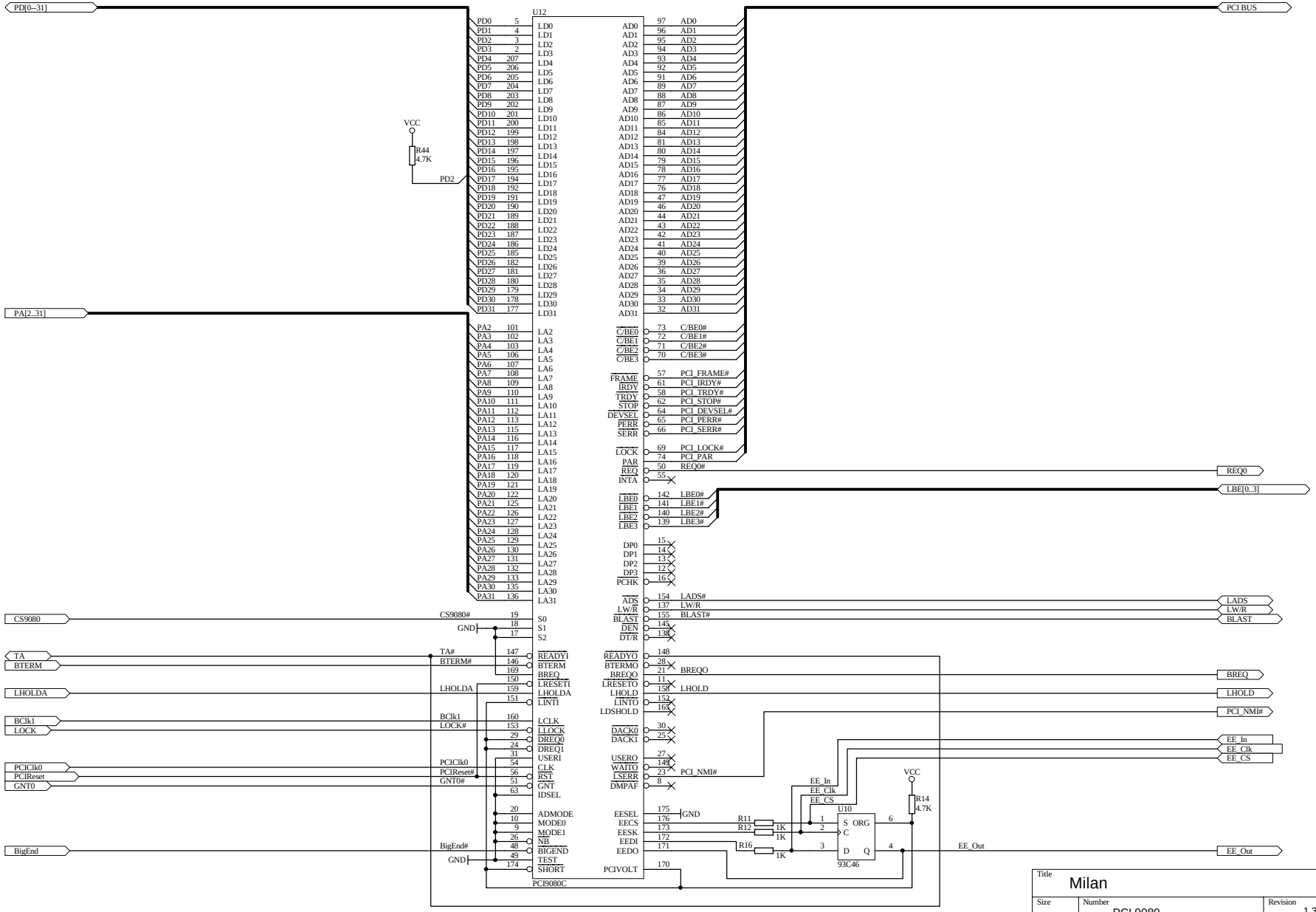
PD[0--31]
PA[2..31]
CS9080
TA
BTERM
LHOLDA
BClk1
LOCK
PCIClk0
PCIReset
GNT0
BigEnd
VCC
R44
4.7K
PD2
U12
PCI9080C
PCI BUS
REQ0
LBE[0..3]
LADS
LW/R
BLAST
BREQ
LHOLD
PCI_NMI#
EE_In
EE_Clk
EE_CS
EE_Out
R11
R12
R16
1K
U10
S ORG
C
D Q
93C46
R14
4.7K
GND
CS9080#
TA#
BTERM#
LHOLDA
BClk1
LOCK#
PCIClk0
PCIReset#
GNT0#
BigEnd#
PCI_NMI#
EE_Out
Title
Milan
Size
A3
Number
PCI 9080
Revision
1.3
Date:
13-Feb-2001
Sheet 5 of 14
File:
S:\PROJEKTE\..\PCI.SCH
Drawn By: Uwe Schneider

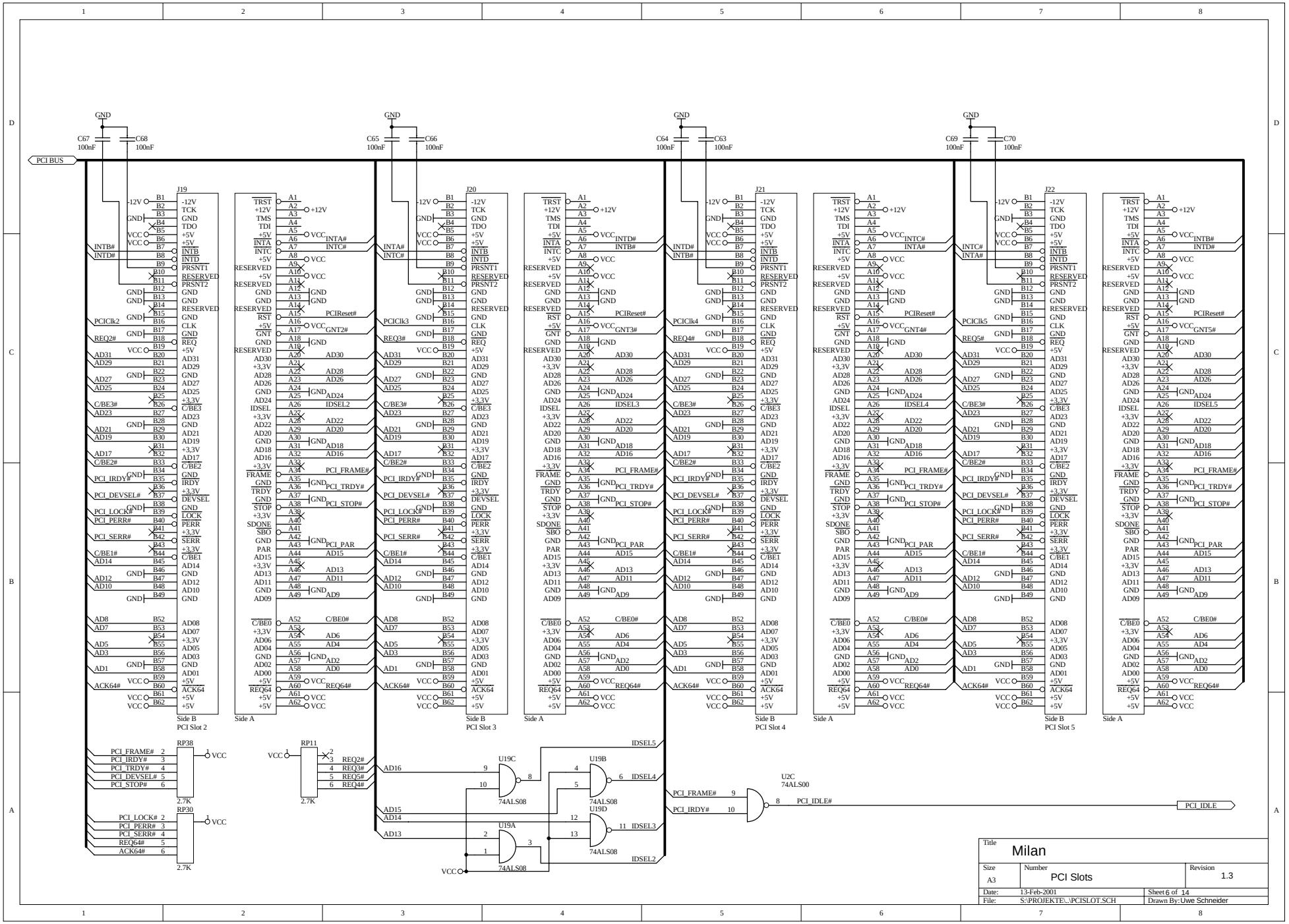

Title	Milan		
Size A3	Number PCI Slots		Revision 1.3
Date: 13-Feb-2001		Sheet 6 of 14	
File: S:\PROJEKTE\..\PCISLOT.SCH		Drawn By: Uwe Schneider	

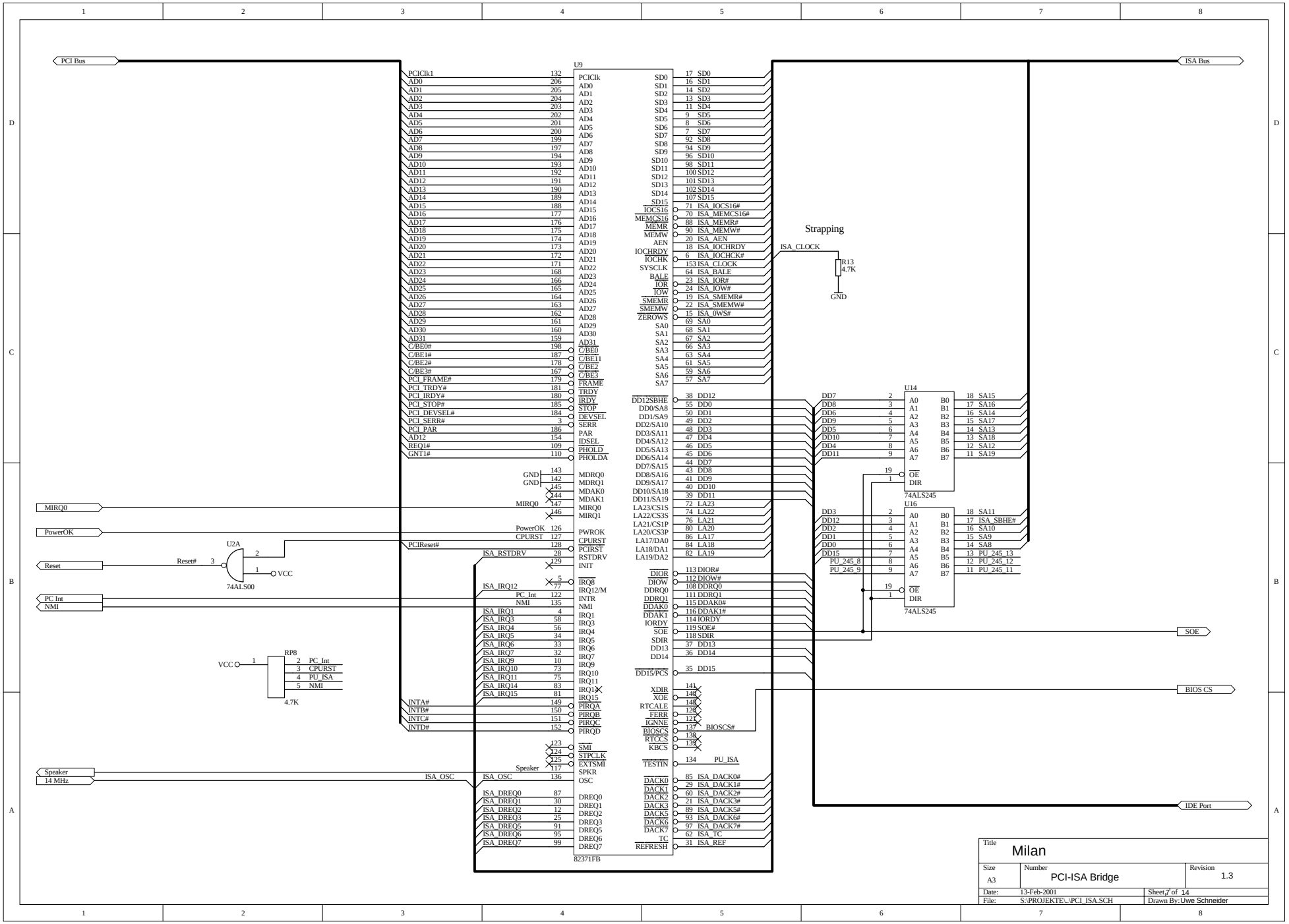
PCI Bus
ISA Bus
U9
82371FB
Strapping
ISA_CLOCK
R13
4.7K
GND
U14
74ALS245
U16
74ALS245
U2A
74ALS00
RP8
4.7K
MIRQ0
PowerOK
Reset
PC Int
NMI
Speaker
14 MHz
SOE
BIOS CS
IDE Port
Title
Milan
Size
A3
Number
PCI-ISA Bridge
Revision
1.3
Date: 13-Feb-2001
Sheet 7 of 14
File: S:\PROJEKTE\..\PCI_ISA.SCH
Drawn By: Uwe Schneider

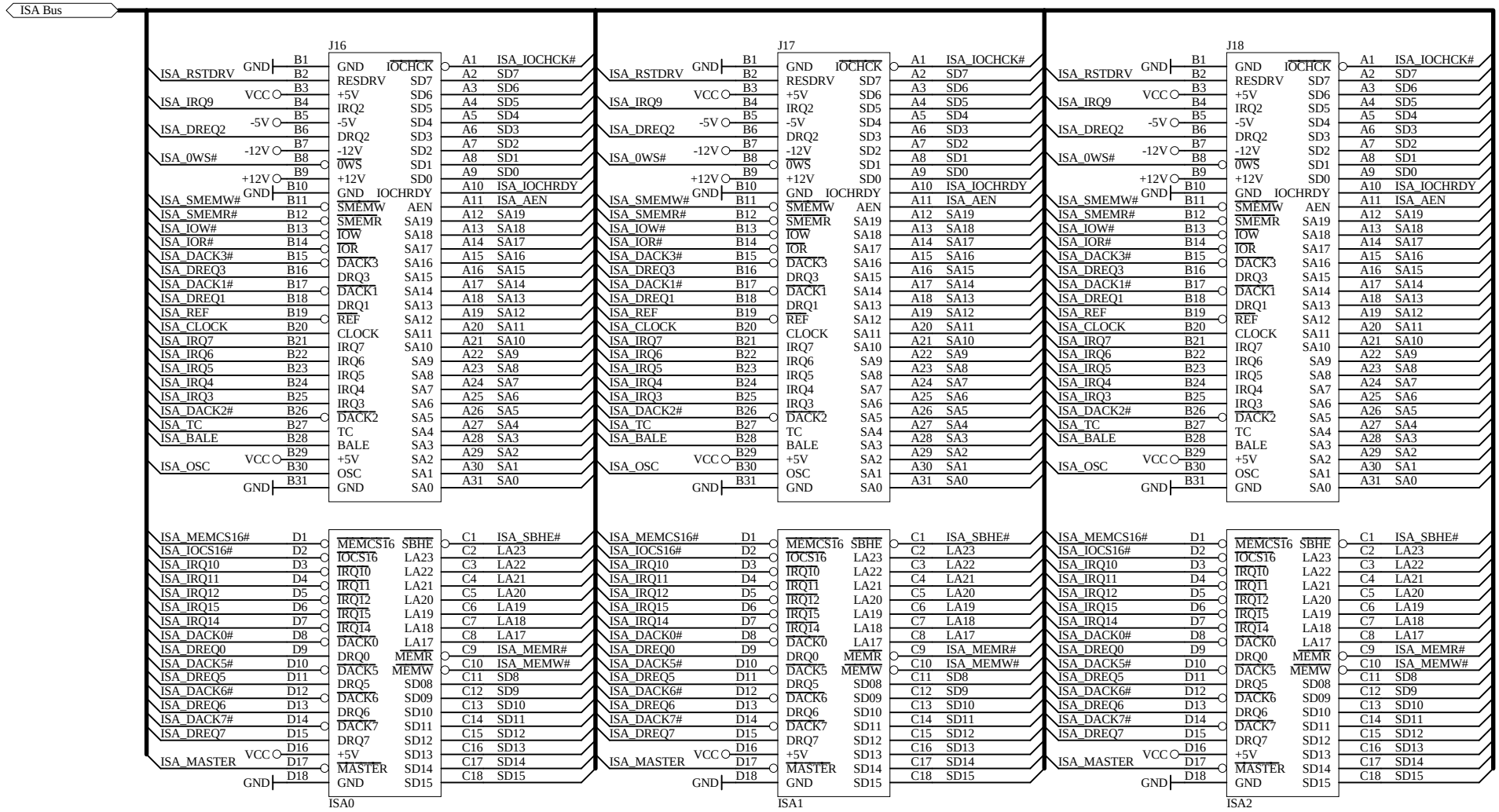

Title	Milan
Size: A4	Number: ISA Slots
Revision: 1.3	
Date: 13-Feb-2001	Sheet 8 of 14
File: S:\PROJEKTE\..\ISASLOT.SCH	Drawn By: Uwe Schneider

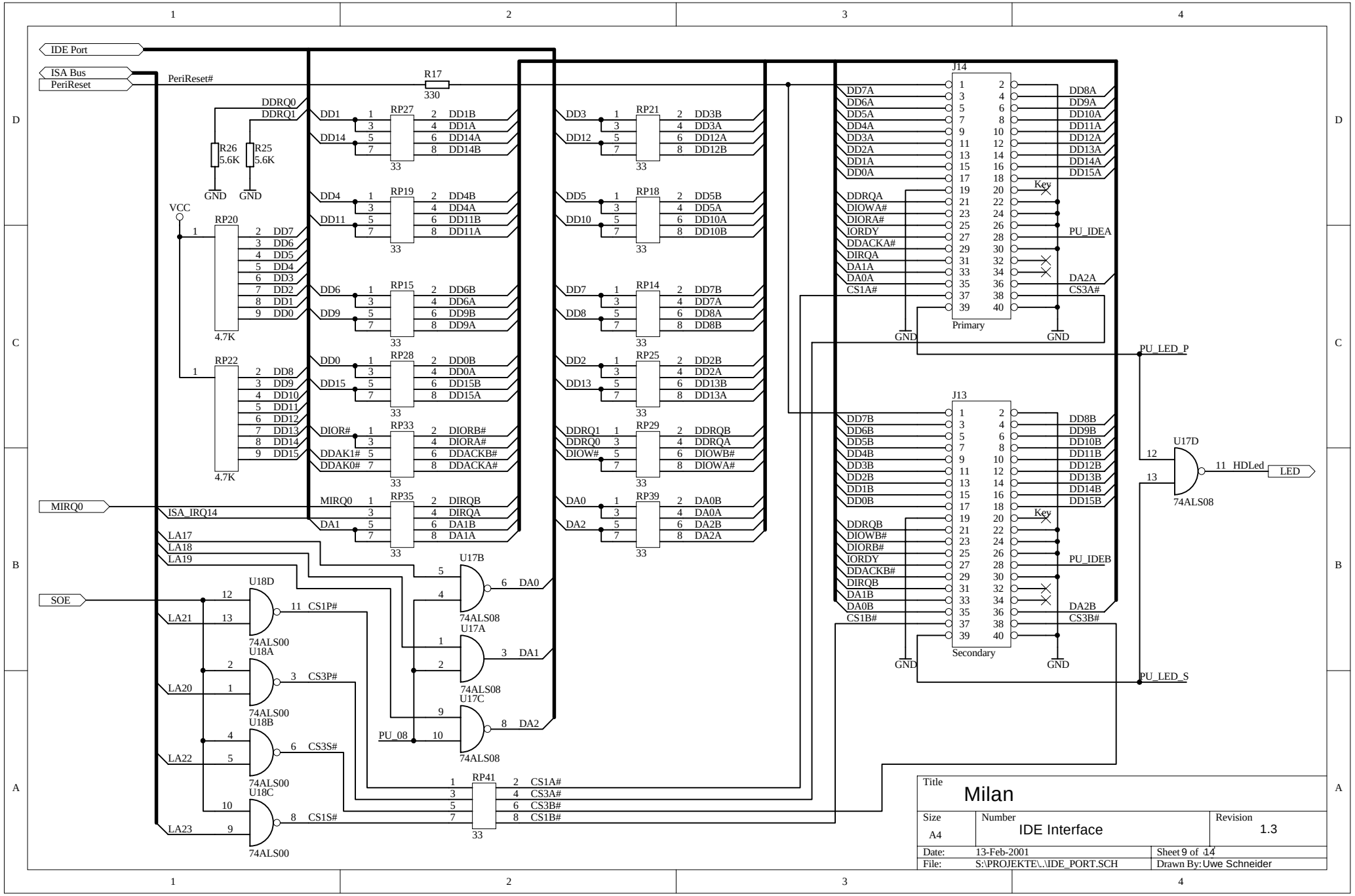

Title	Milan	
Size A4	Number IDE Interface	Revision 1.3
Date: 13-Feb-2001		Sheet 9 of 14
File: S:\PROJEKTE\..\IDE_PORT.SCH		Drawn By: Uwe Schneider

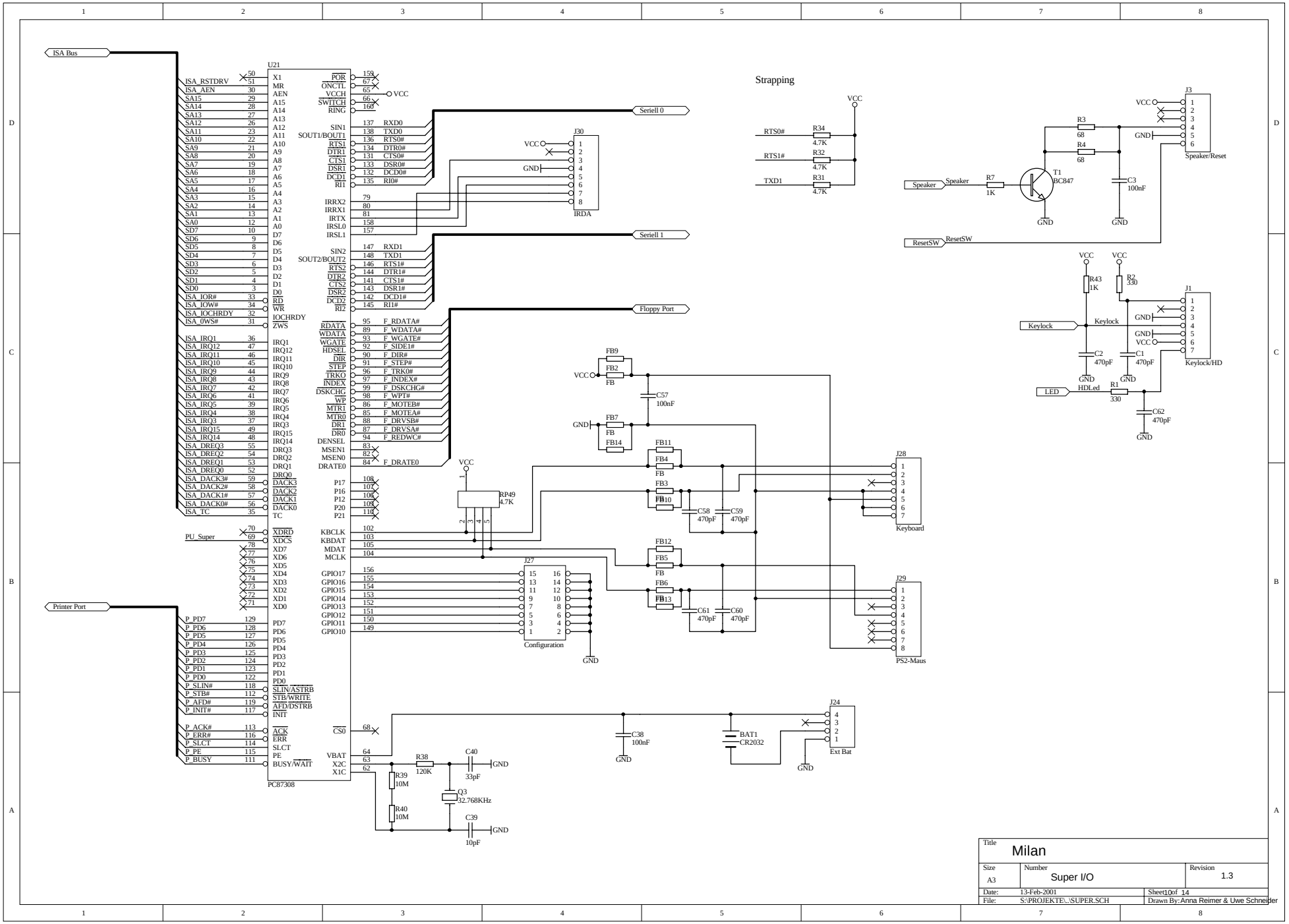
ISA Bus
U21
PC87308
Strapping
VCC
RTS0# R34 4.7K
RTS1# R32 4.7K
TXD1 R31 4.7K
Seriell 0
Seriell 1
Floppy Port
Printer Port
J30
IRDA
J3
Speaker/Reset
Speaker
R7 1K
T1 BC847
R3 68
R4 68
C3 100nF
ResetSW
J1
Keylock/HD
Keylock
R43 1K
R2 330
C2 470pF
C1 470pF
LED
HDLed
R1 330
C62 470pF
J28
Keyboard
J29
PS2-Maus
J27
Configuration
RP49 4.7K
C57 100nF
C58 470pF
C59 470pF
C60 470pF
C61 470pF
J24
Ext Bat
BAT1 CR2032
C38 100nF
R38 120K
C40 33pF
R39 10M
R40 10M
Q3 32.768KHz
C39 10pF
GND
Title
Milan
Size
A3
Number
Super I/O
Revision
1.3
Date: 13-Feb-2001
Sheet 10 of 14
File: S:\PROJEKTE\..\SUPER.SCH
Drawn By: Anna Reimer & Uwe Schneider

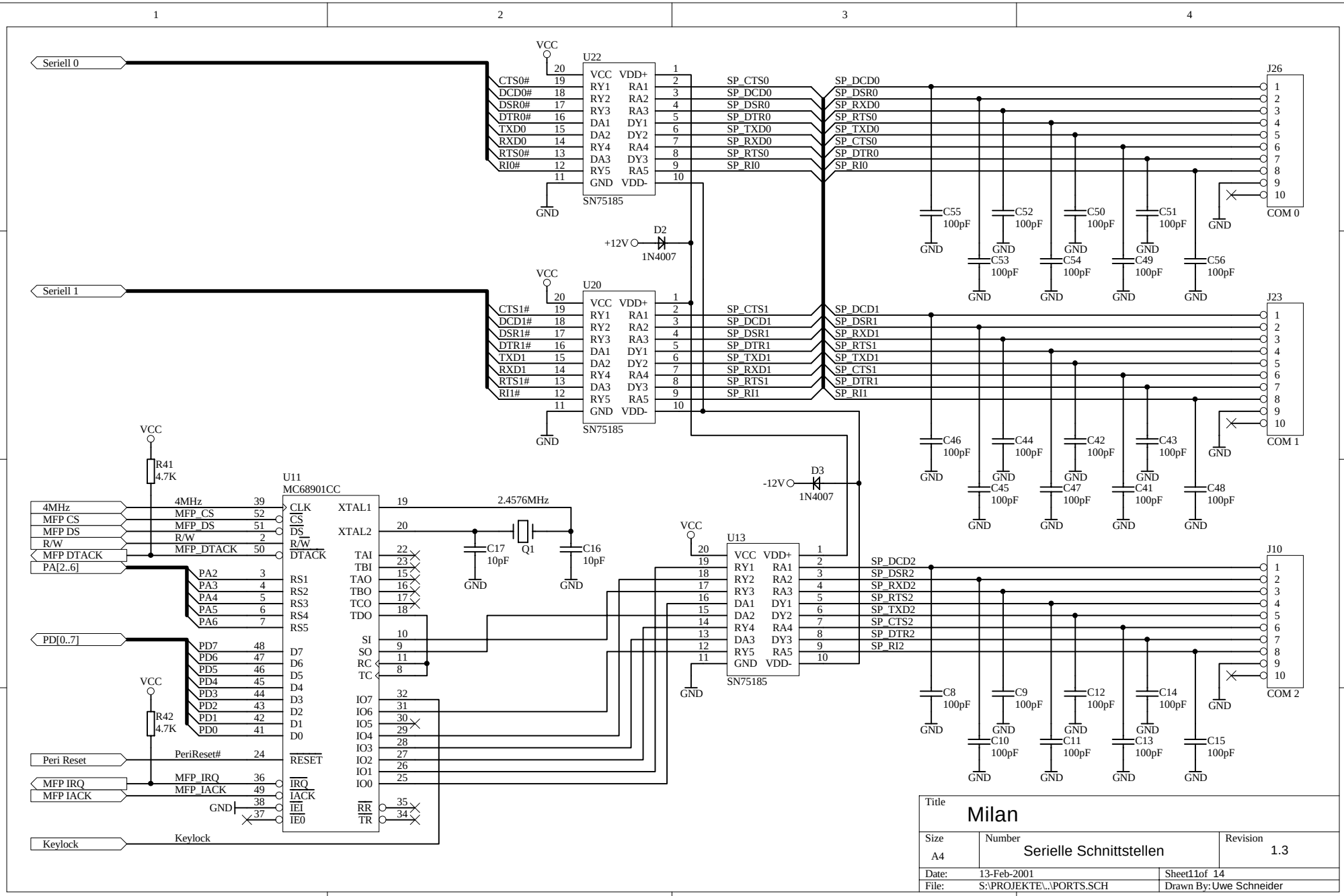
Seriell 0
Seriell 1
U22
U20
U11
U13
SN75185
MC68901CC
J26
J23
J10
COM 0
COM 1
COM 2
VCC
GND
+12V
-12V
D2
D3
1N4007
R41
4.7K
R42
4.7K
Q1
2.4576MHz
C16
10pF
C17
10pF
4MHz
MFP CS
MFP DS
R/W
MFP DTACK
PA[2..6]
PD[0..7]
Peri Reset
MFP IRQ
MFP IACK
Keylock
PeriReset#
MFP_IRQ
MFP_IACK
MFP_CS
MFP_DS
MFP_DTACK
SP_CTS0
SP_DCD0
SP_DSR0
SP_DTR0
SP_TXD0
SP_RXD0
SP_RTS0
SP_RI0
SP_CTS1
SP_DCD1
SP_DSR1
SP_DTR1
SP_TXD1
SP_RXD1
SP_RTS1
SP_RI1
SP_DCD2
SP_DSR2
SP_RXD2
SP_RTS2
SP_TXD2
SP_CTS2
SP_DTR2
SP_RI2
C55 100pF
C52 100pF
C50 100pF
C51 100pF
C53 100pF
C54 100pF
C49 100pF
C56 100pF
C46 100pF
C44 100pF
C42 100pF
C43 100pF
C45 100pF
C47 100pF
C41 100pF
C48 100pF
C8 100pF
C9 100pF
C12 100pF
C14 100pF
C10 100pF
C11 100pF
C13 100pF
C15 100pF
Title
Milan
Size
A4
Number
Serielle Schnittstellen
Revision
1.3
Date: 13-Feb-2001
Sheet11of 14
File: S:\PROJEKTE\..\PORTS.SCH
Drawn By: Uwe Schneider

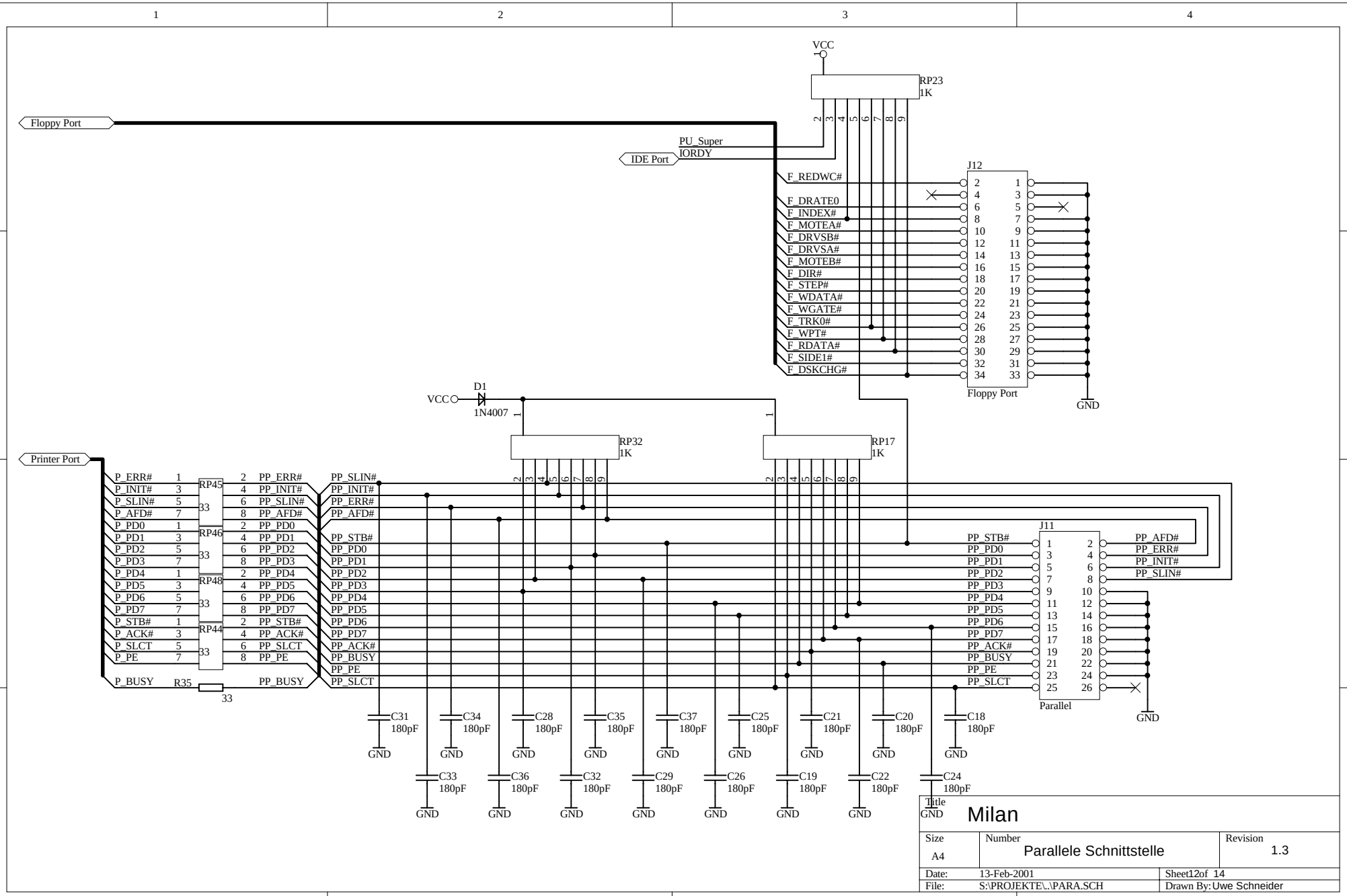
VCC
RP23
1K
Floppy Port
PU_Super
IORDY
IDE Port
J12
F_REDWC#
F_DRATE0
F_INDEX#
F_MOTEA#
F_DRVSB#
F_DRVSA#
F_MOTEB#
F_DIR#
F_STEP#
F_WDATA#
F_WGATE#
F_TRK0#
F_WPT#
F_RDATA#
F_SIDE1#
F_DSKCHG#
Floppy Port
GND
D1
1N4007
RP32
1K
RP17
1K
Printer Port
P_ERR#
P_INIT#
P_SLIN#
P_AFD#
P_PD0
P_PD1
P_PD2
P_PD3
P_PD4
P_PD5
P_PD6
P_PD7
P_STB#
P_ACK#
P_SLCT
P_PE
P_BUSY
RP45
RP46
RP48
RP44
33
R35
PP_ERR#
PP_INIT#
PP_SLIN#
PP_AFD#
PP_PD0
PP_PD1
PP_PD2
PP_PD3
PP_PD4
PP_PD5
PP_PD6
PP_PD7
PP_STB#
PP_ACK#
PP_SLCT
PP_BUSY
PP_PE
J11
Parallel
C31 180pF
C34 180pF
C28 180pF
C35 180pF
C37 180pF
C25 180pF
C21 180pF
C20 180pF
C18 180pF
C33 180pF
C36 180pF
C32 180pF
C29 180pF
C26 180pF
C19 180pF
C22 180pF
C24 180pF
Title
Milan
Size
A4
Number
Parallele Schnittstelle
Revision
1.3
Date:
13-Feb-2001
Sheet12of 14
File:
S:\PROJEKTE\..\PARA.SCH
Drawn By:Uwe Schneider

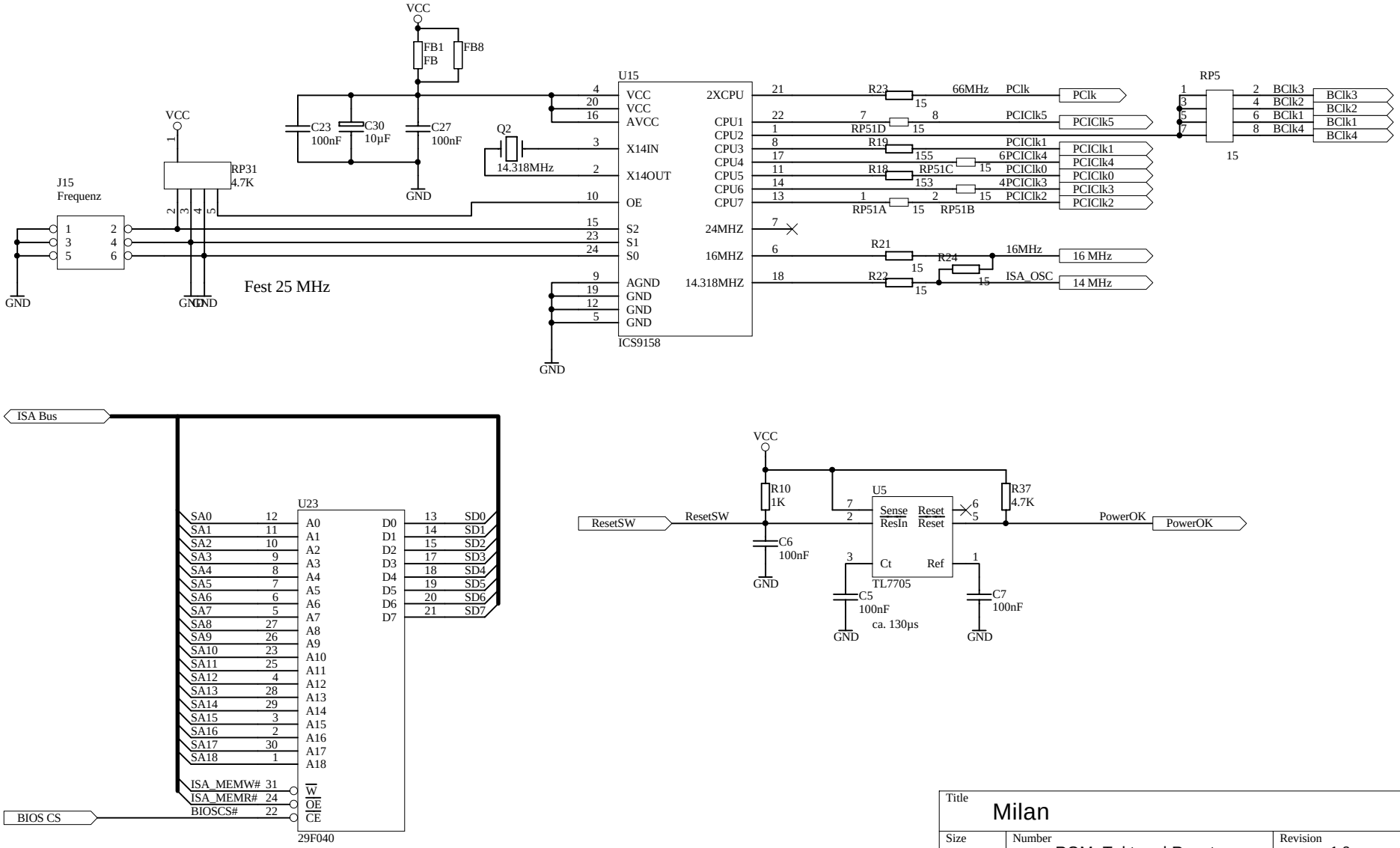

Title	Milan	
Size A4	Number ROM, Takt und Reset	Revision 1.3
Date: 13-Feb-2001	Sheet 13 of 14	
File: S:\PROJEKTE\..\TAKT.SCH	Drawn By: Anna Reimer & Uwe Schneider	

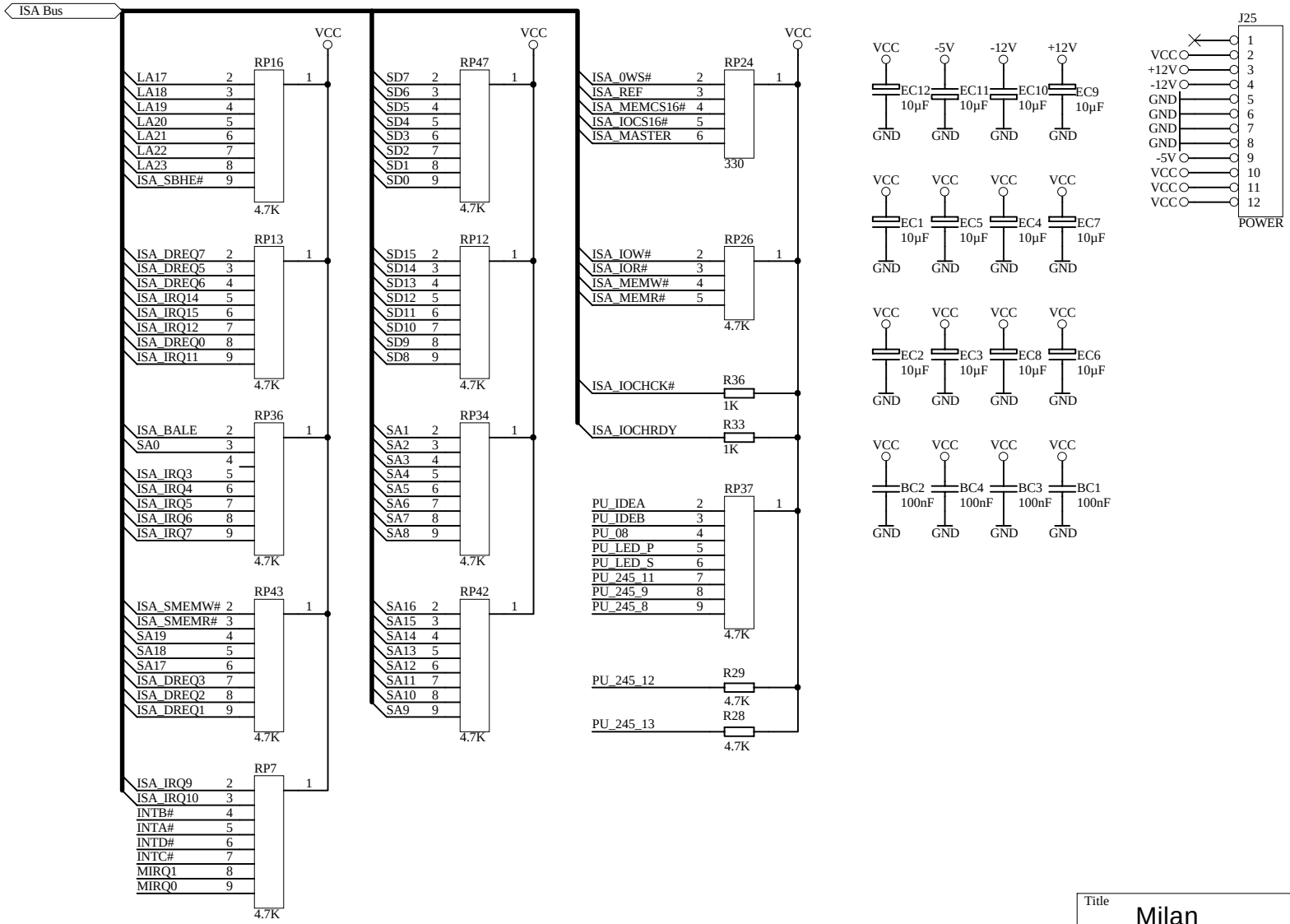

Title: Milan		
Size: A4	Number: PullUp PullDown Power	Revision: 1.3
Date: 13-Feb-2001	Sheet 14 of 14	
File: S:\PROJEKTE\..\PUPD.SCH	Drawn By: Uwe Schneider	

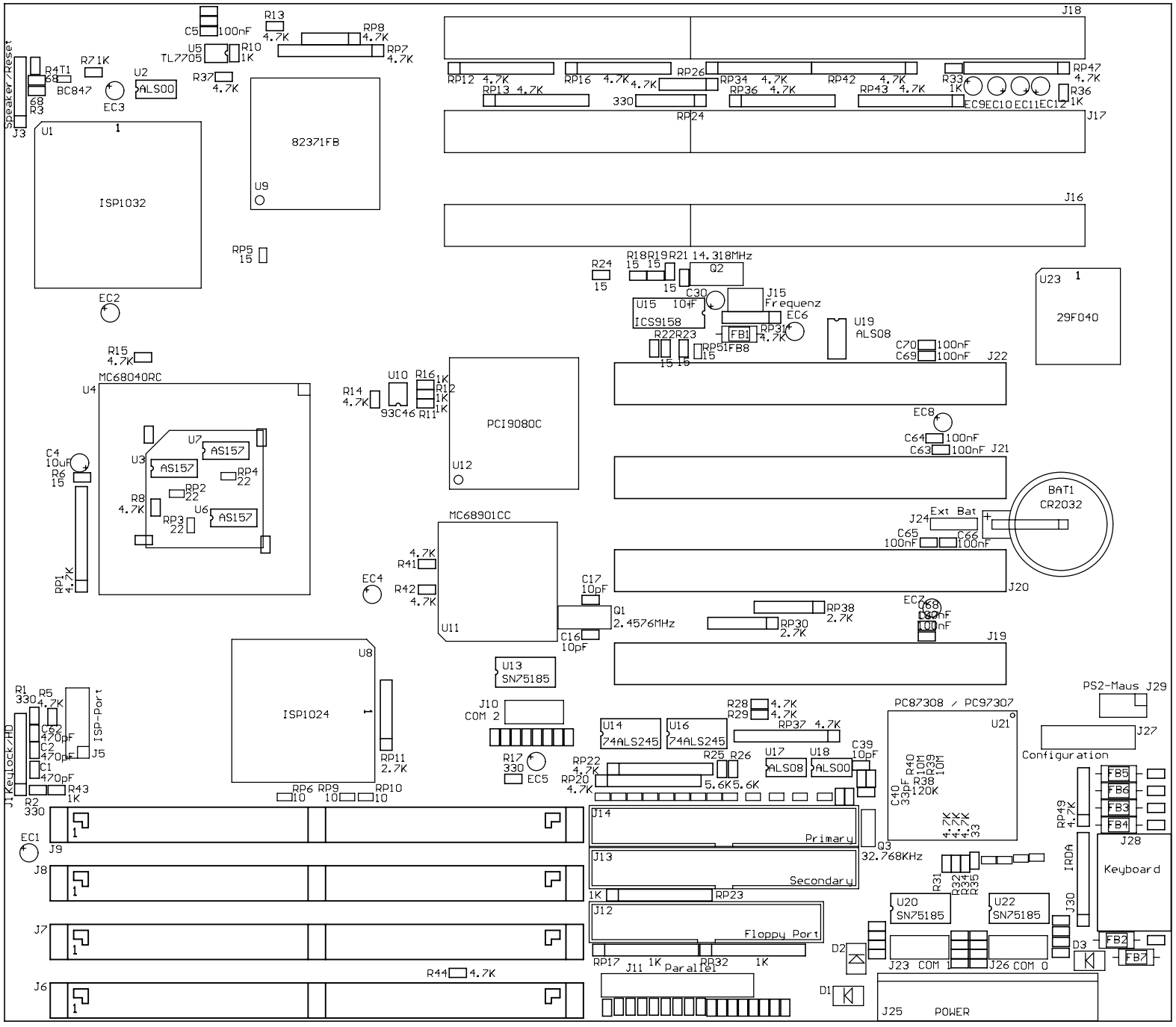
J18
J17
J16
J22
J21
J20
J19
J14
Primary
J13
Secondary
J12
Floppy Port
J11
Parallel
J23 COM 1
J26 COM 0
J25
POWER
J9
J8
J7
J6
J3
Speaker/Reset
J1 Keylock/HD
J5
ISP-Port
J10
COM 2
J27
Configuration
J28
Keyboard
J29
PS2-Maus
J30
IrDA
U1
ISP1032
U2
ALS00
U5
TL7705
U9
82371FB
U4
MC68040RC
U3
U7
U6
AS157
U10
93C46
U11
MC68901CC
U12
PCI9080C
U8
ISP1024
U13
SN75185
U14
74ALS245
U16
74ALS245
U17
ALS08
U18
ALS00
U19
ALS08
U20
SN75185
U22
SN75185
U21
PC87308 / PC97307
U23
29F040
U15
ICS9158
Q1
2.4576MHz
Q2
14.318MHz
Q3
32.768KHz
J15
Frequenz
BAT1
CR2032
J24
Ext Bat
D1
D2
D3
FB1
FB2
FB3
FB4
FB5
FB6
FB7
FB8
EC1
EC2
EC3
EC4
EC5
EC6
EC7
EC8
EC9
EC10
EC11
EC12
R1T1
BC847